EI - 96 mod. ZG

ZETTI S.r.l.

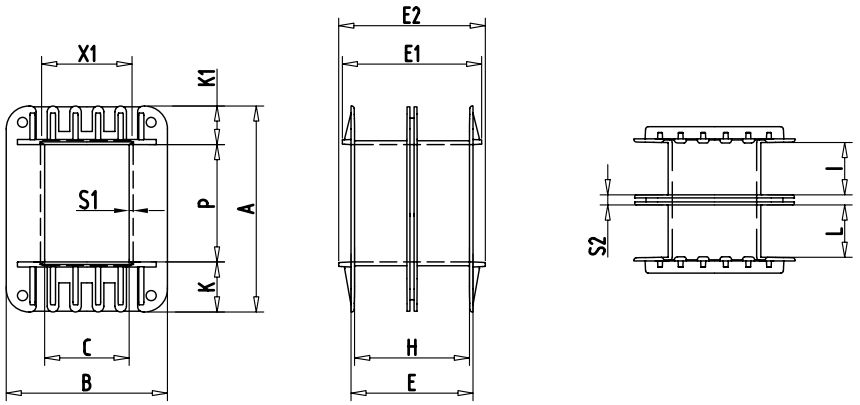

A	B	E1	E2	S1	H	S2	I	L	K	K1	X1	C	P	E	CODICE
70.2	62.8	54.0	57.0	1.5	44.2				19.5	15.0	8,8x4	**32.6**	**35.7**	**47.2**	R3236Z**1**6YXX--01
70.2	62.8	54.0	57.0	1.5	44.2	2.0	21.1	21.1	19.5	15.0	8,8x4	**32.6**	**35.7**	**47.2**	R3236Z**2**6YXX--01
80.2	62.8	54.0	57.0	1.5	44.2				19.5	15.0	8.8x4	**32.6**	**45.7**	**47.2**	R3246Z**1**6YXX--01
80.2	62.8	54.0	57.0	1.5	44.2	2.0	21.1	21.1	19.5	15.0	8.8x4	**32.6**	**45.7**	**47.2**	R3246Z**2**6YXX--01
94.2	62.8	54.0	57.0	1.5	44.2				19.5	15.0	8.8x4	**32.6**	**59.7**	**47.2**	R3260Z**1**6YXX--01
94.2	62.8	54.0	57.0	1.5	44.2	2.0	21.1	21.1	19.5	15.0	8.8x4	**32.6**	**59.7**	**47.2**	R3260Z**2**6YXX--01

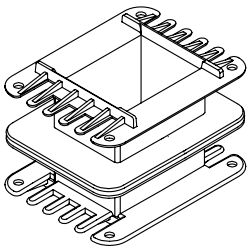

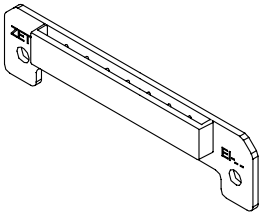

BASETTA PORTAMORSETTI AB96--
VEDI pag: 37.3

BUSSOLA ISOLANTE BU03--
VEDI pag: 37.3

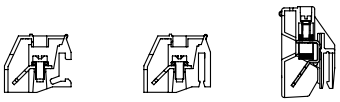

MONTANO I MORSETTI A SCATTO E AD INNESTO
VEDI pag: 37.2 e pag. 37.4